E21 Lexus VVT Spark

Last Changed: 20/11/2012
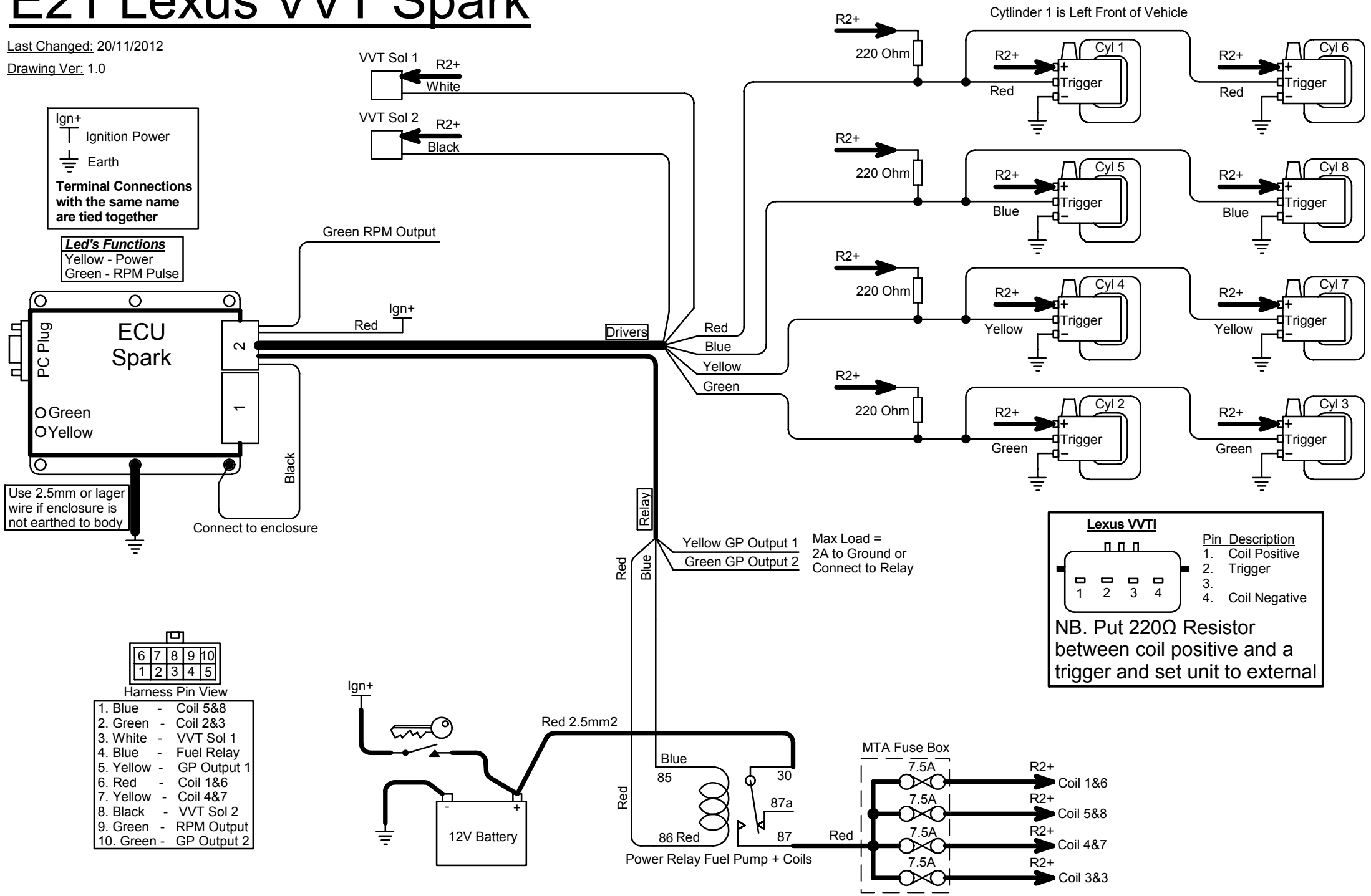
Drawing Ver: 1.0